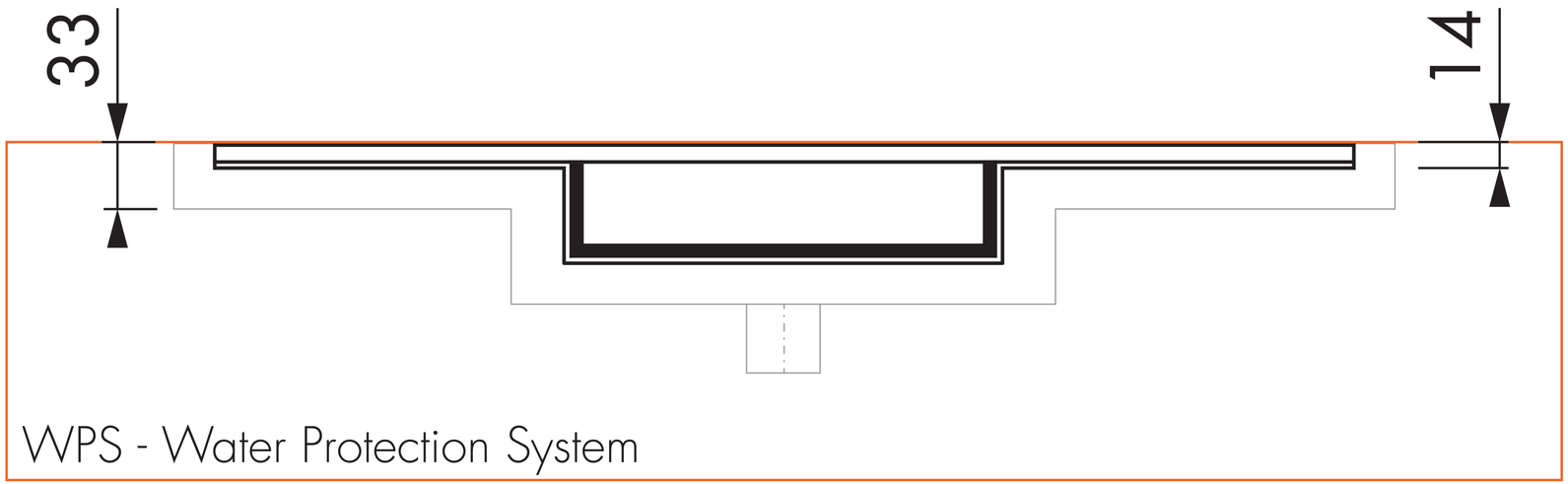
33
14
WPS - Water Protection System

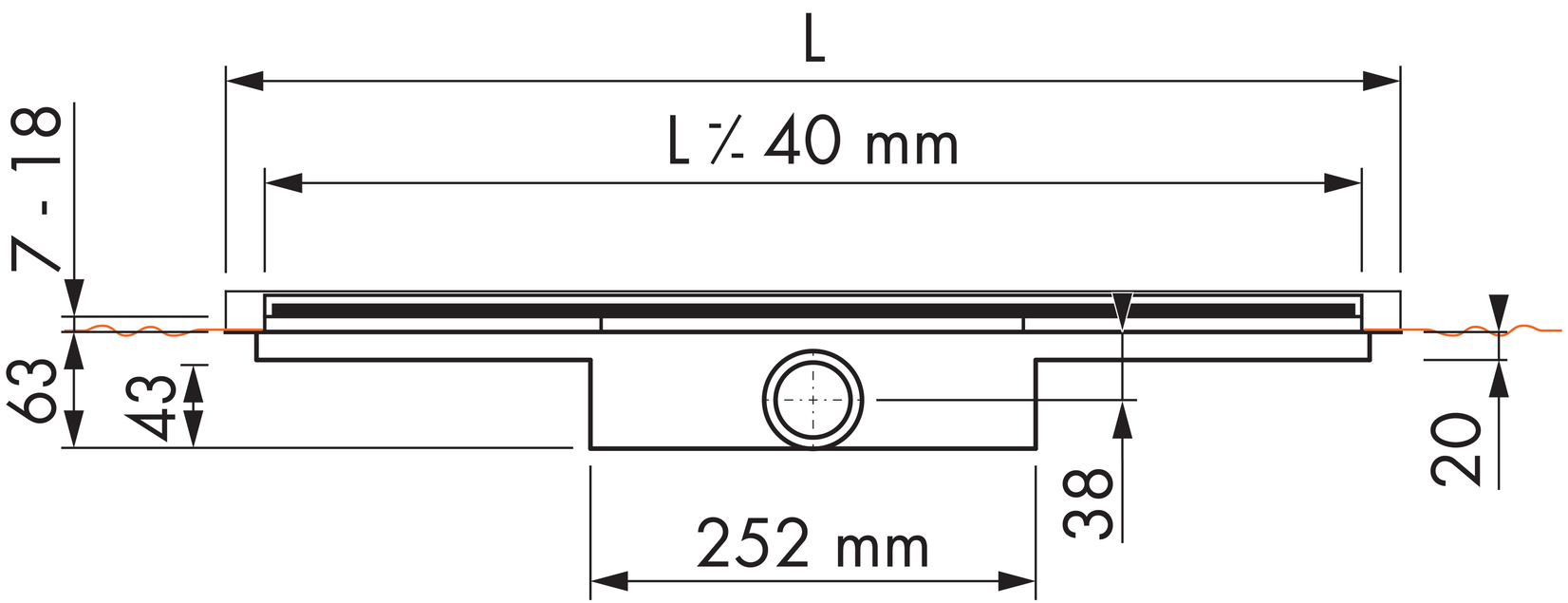
L
L ≒ 40 mm
7 - 18
63
43
38
20
252 mm

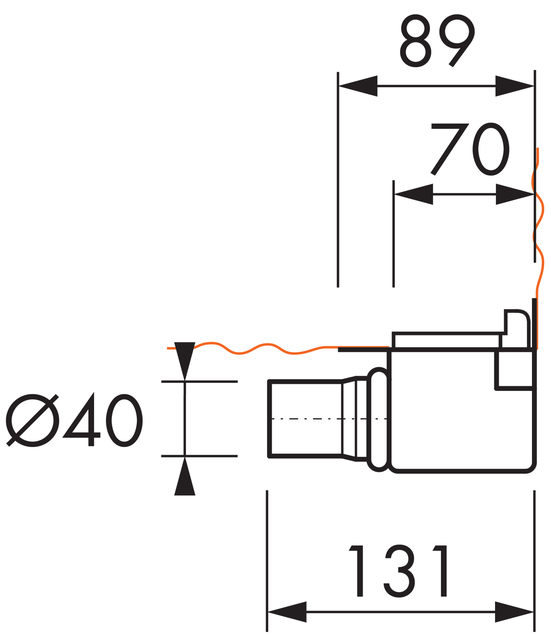
89
70
Ø40
131